PART NUMBER	TYPE	LOADING	MATERIAL	COLOR	INSERTS	INSERT QTY.	LOCK	INSERT 'A'	INSERT 'B'	INSERT 'C'
2012-XXX				BLACK						MADE IN USA

REV	DATE	DESCRIPTION	INIT
01	01/07/09	PRELIMINARY	XXX

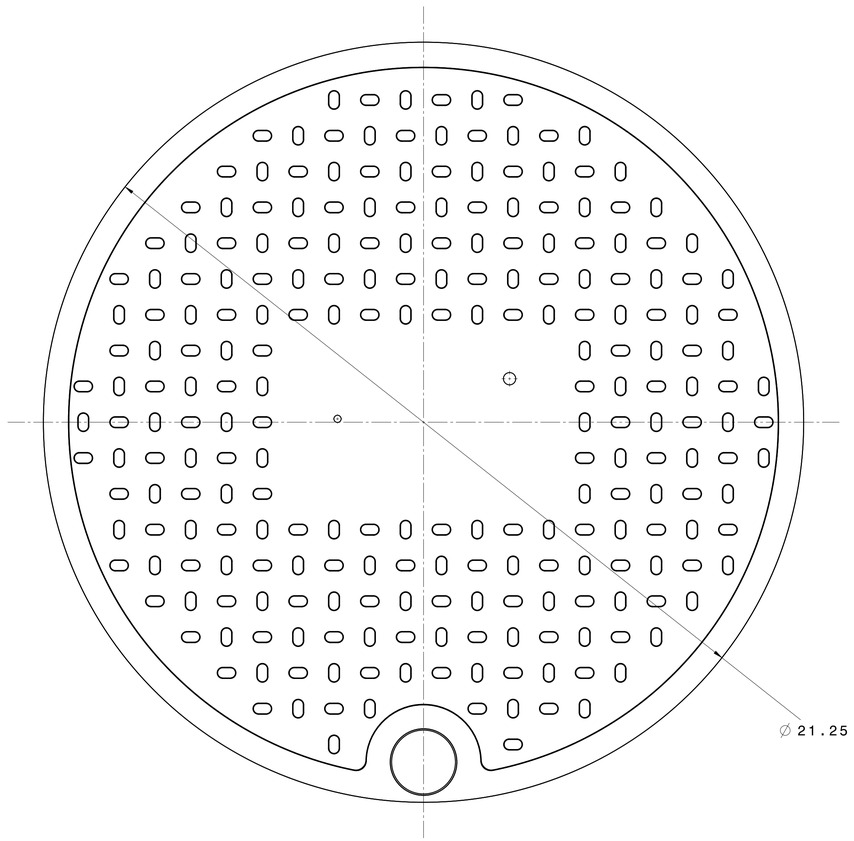

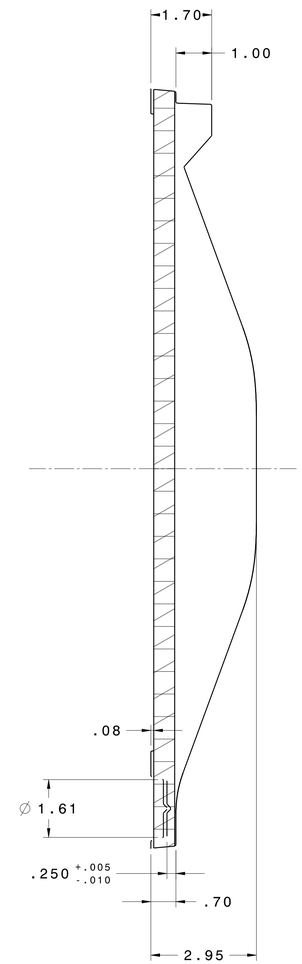

Section A-A[2]

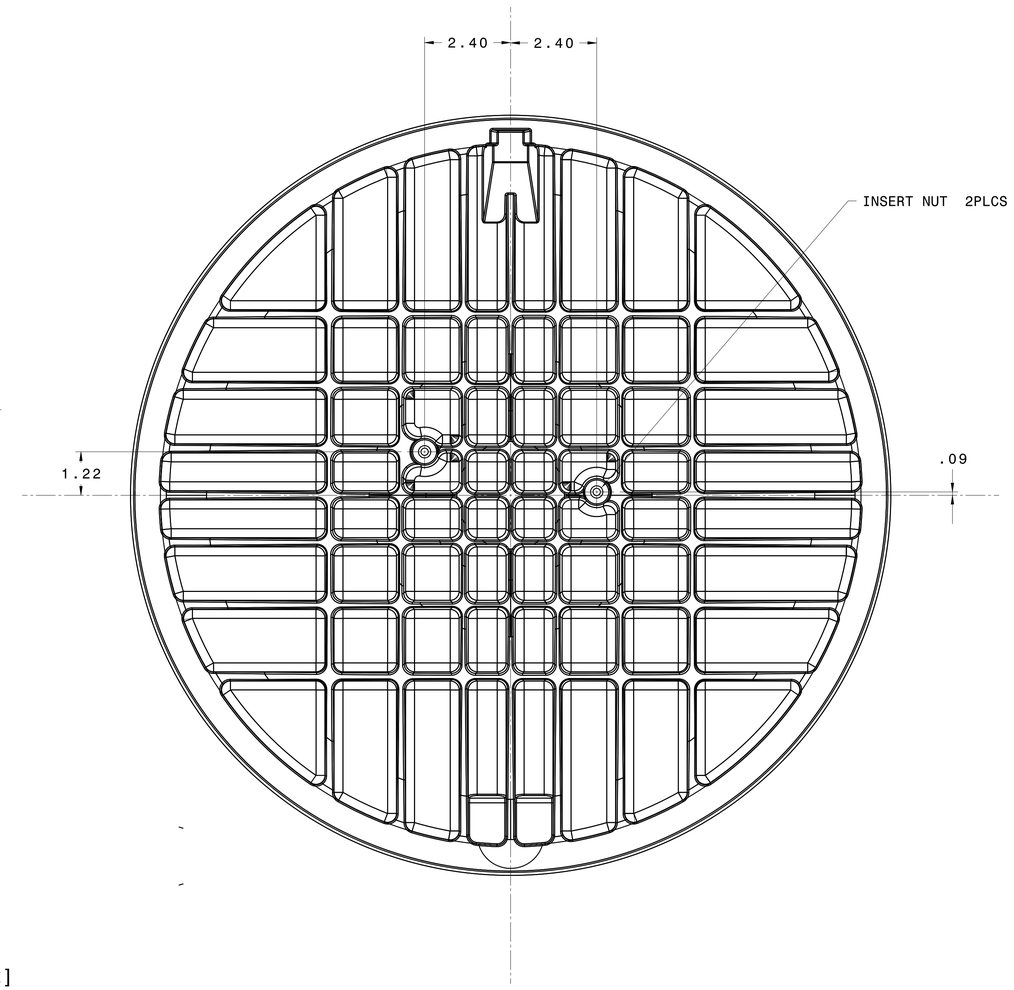

TOLERANCE UNLESS OTHERWISE SPECIFIED			
ONE PLACE ±0.03 TWO PLACE ±0.015 THREE PLACE ±0.005 ANGLE ±1.0° DRAFT ANGLE 3.0°	DRAWN BY B.BUXTON	DATE 01/07/09	
	CHECKED BY XXX	DATE XXX	
	DESIGNED BY XXX	DATE XXX	

This drawing is the property of GMI Composites. It can't be reproduced or communicated without our written agreement.

GMI COMPOSITES, INC.
1355 W. SHERMAN BLVD.
MUSKEGON, MI 49441

DRAWING TITLE: 21" COVER

SIZE	DRAWING NUMBER	REV
D	2012	01

SCALE 1:2 | VOLUME: | SHEET 1/1